ZT510

P1090763-003

1

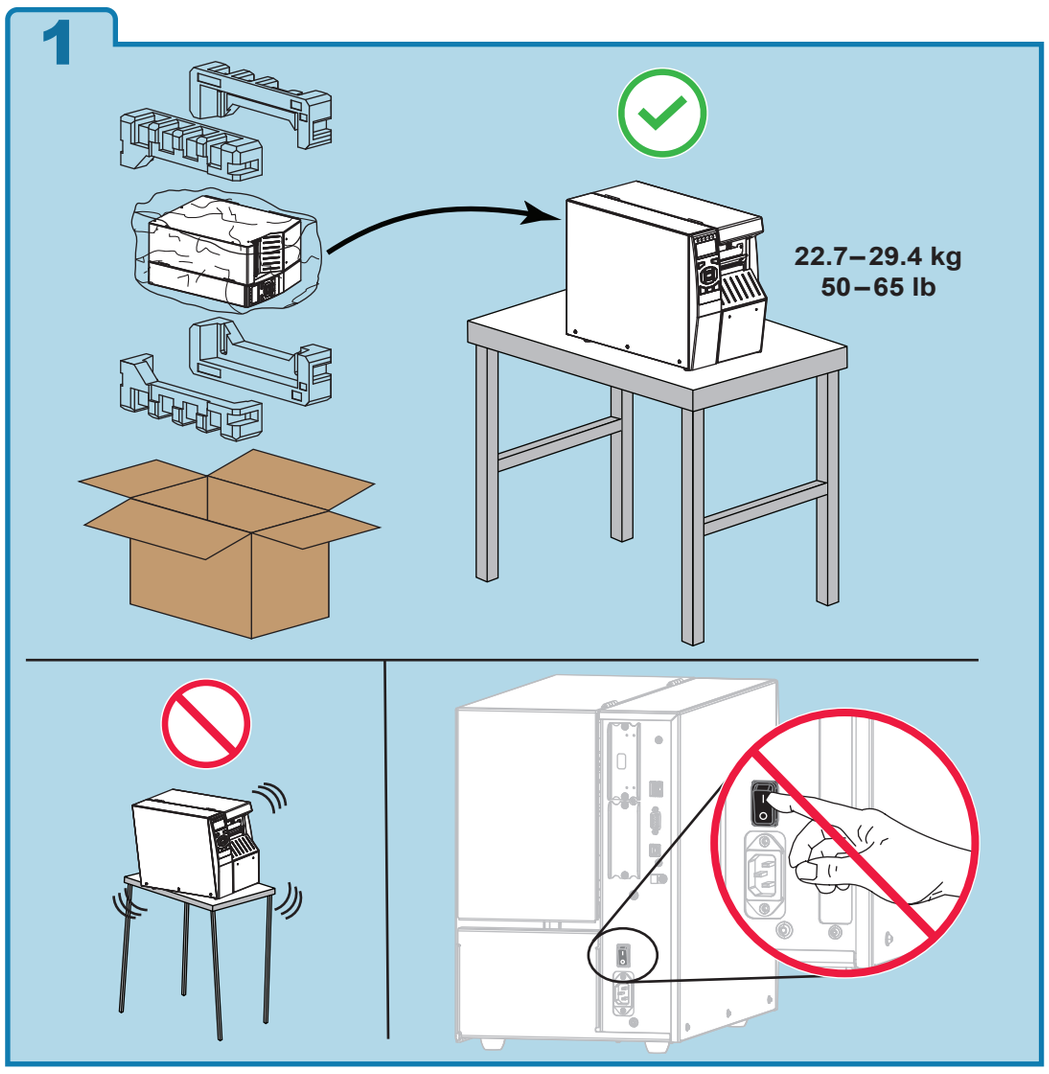

2

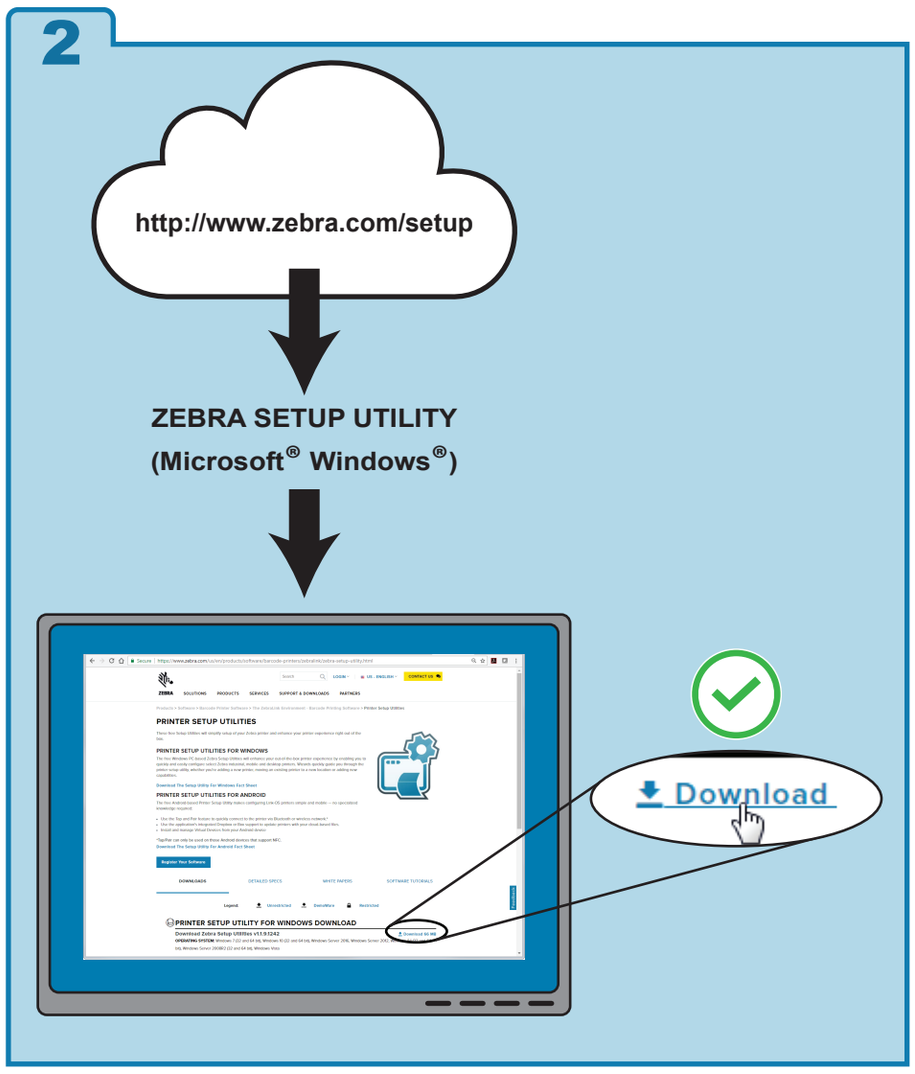

3

4

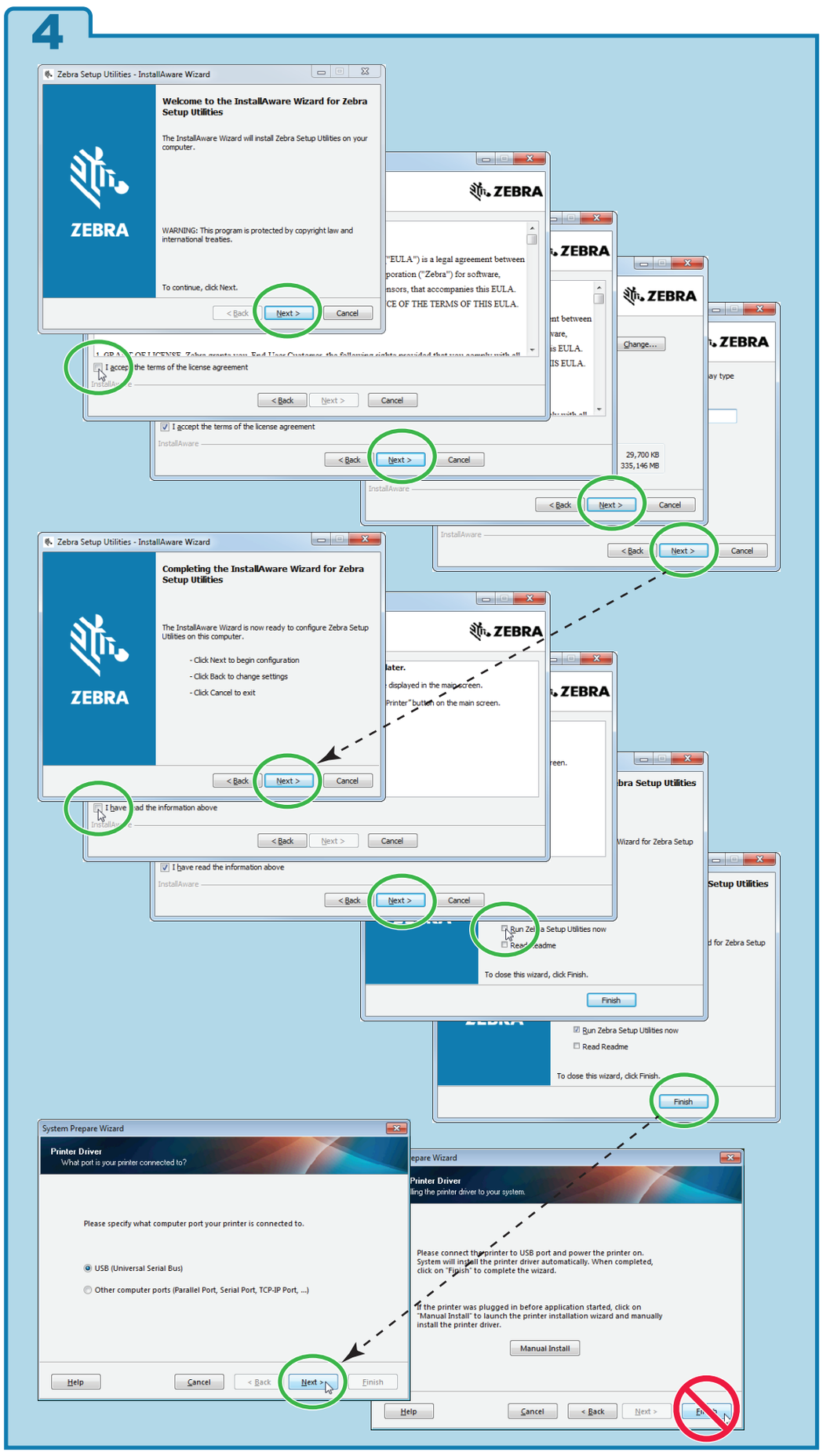

5

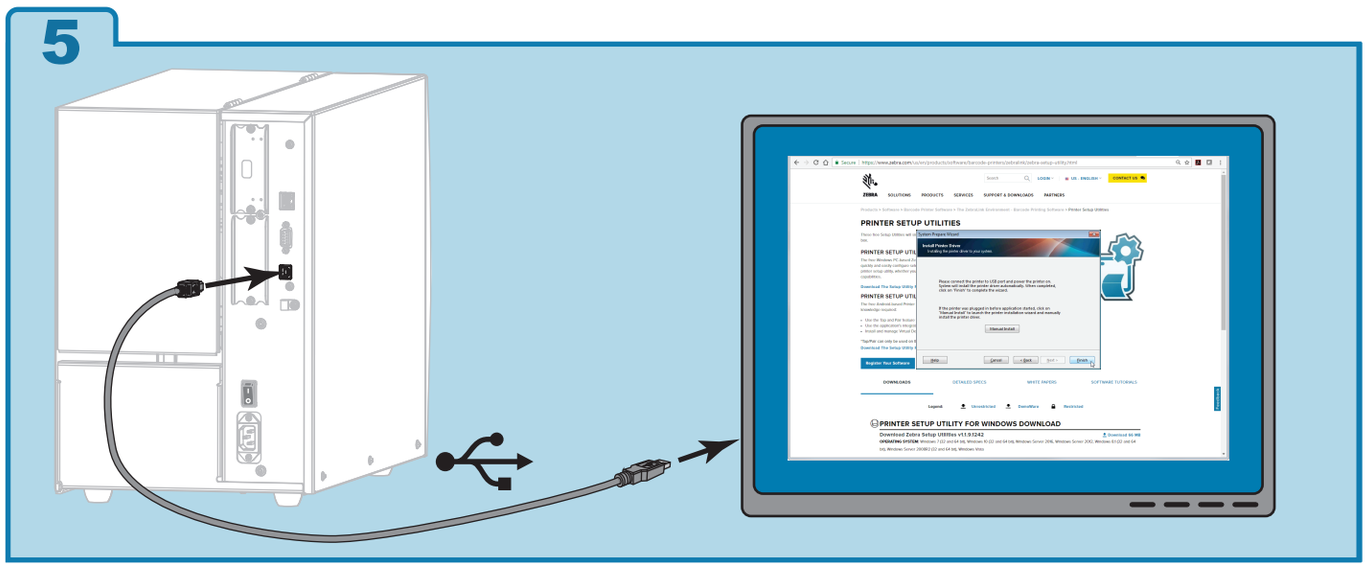

6

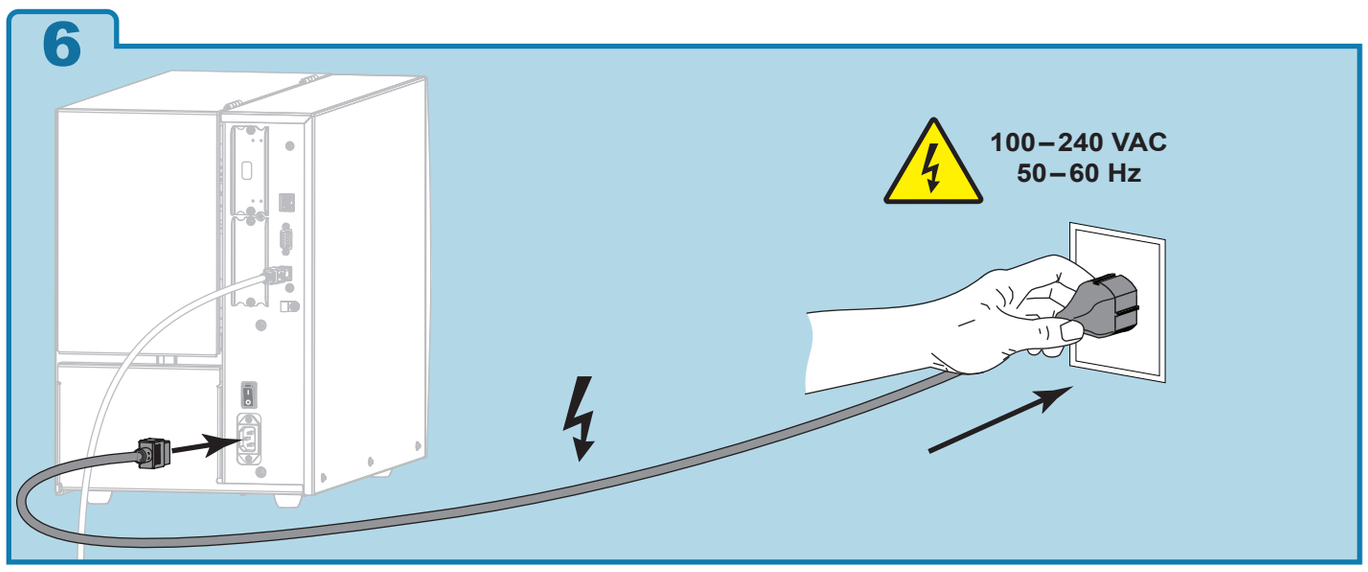

7

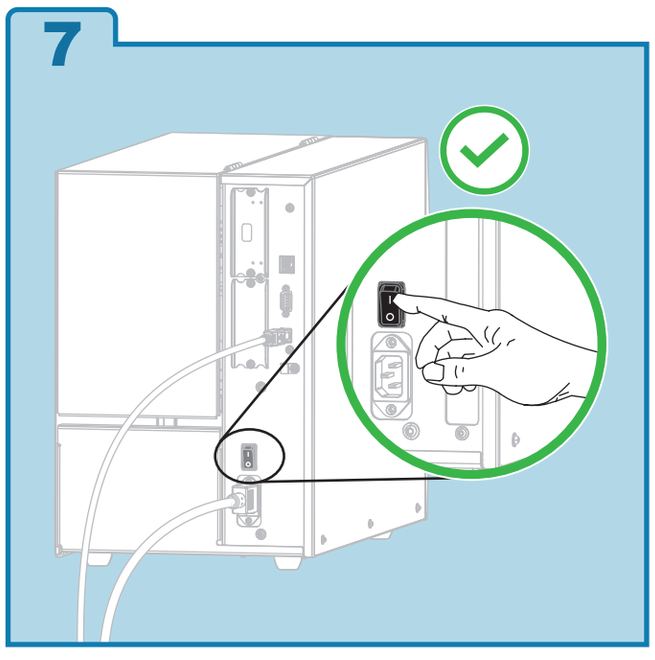

8

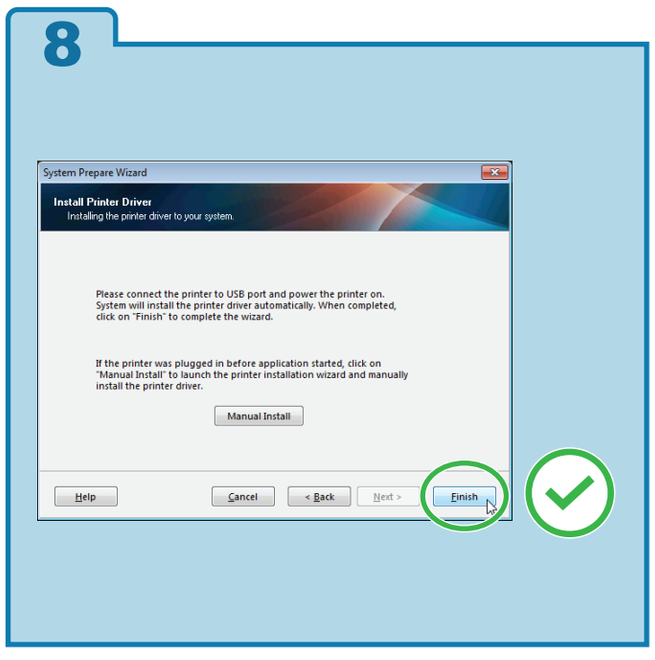

© 2018 ZIH Corp. and/or its affiliates. All rights reserved.

ZT510

http://www.zebra.com/zt500-info

1

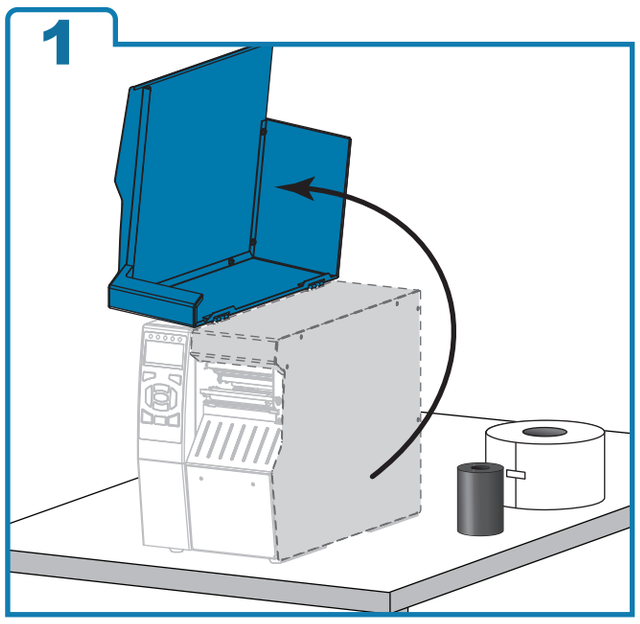

2

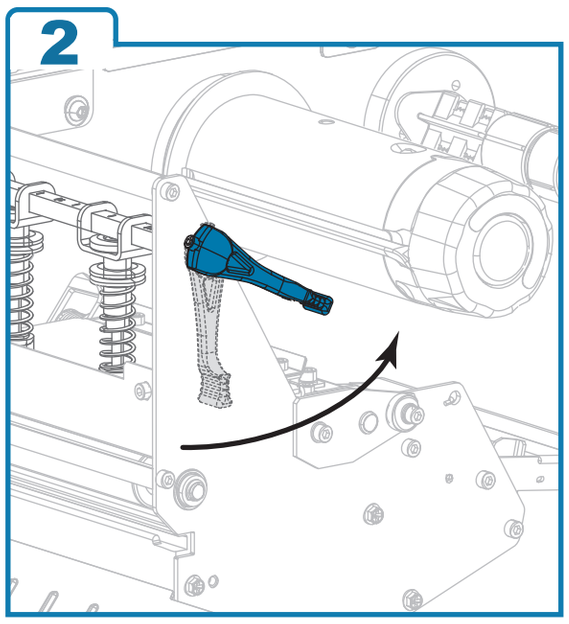

3

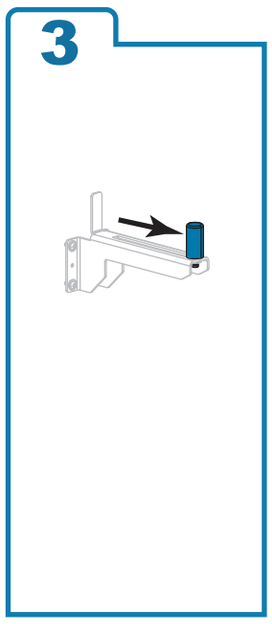

4

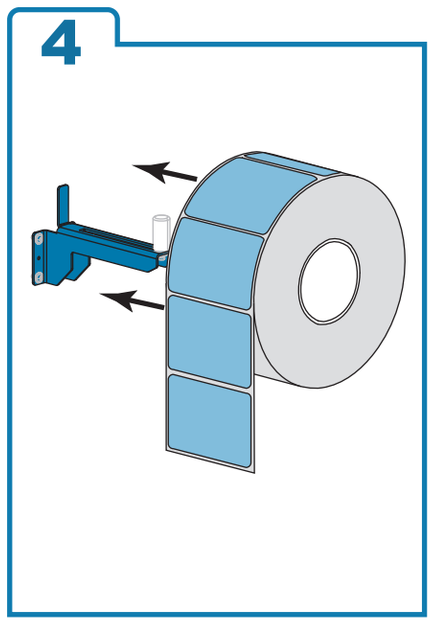

5

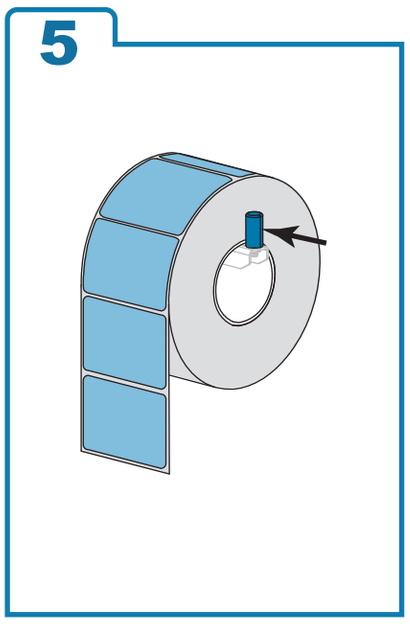

6

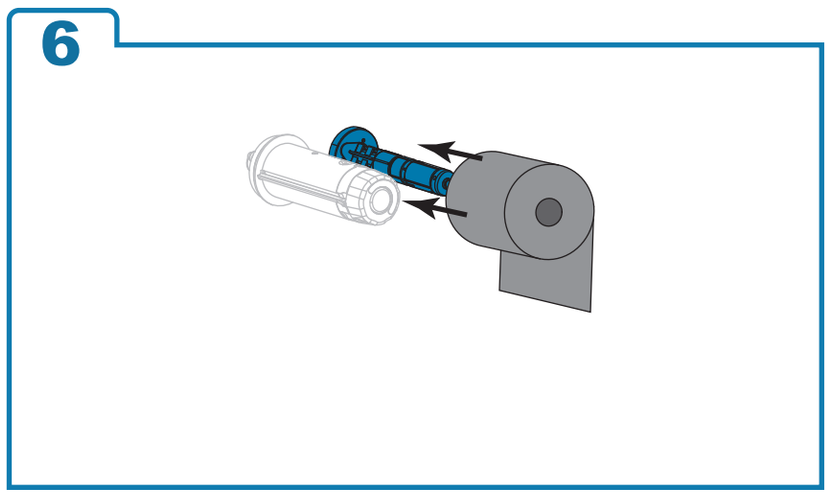

7

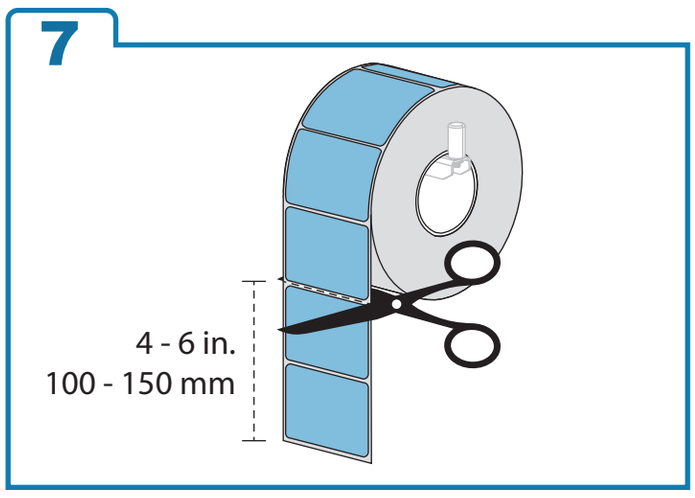

8

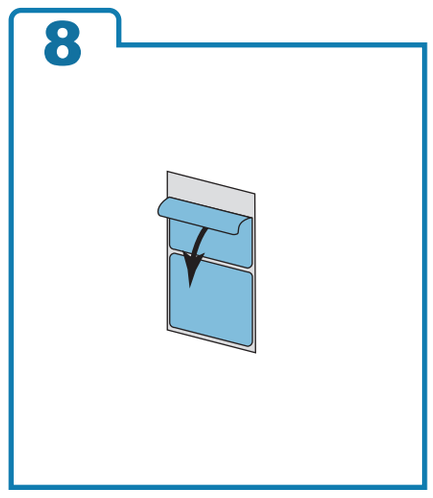

9

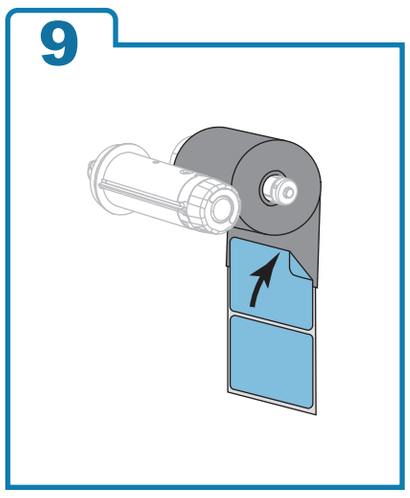

10

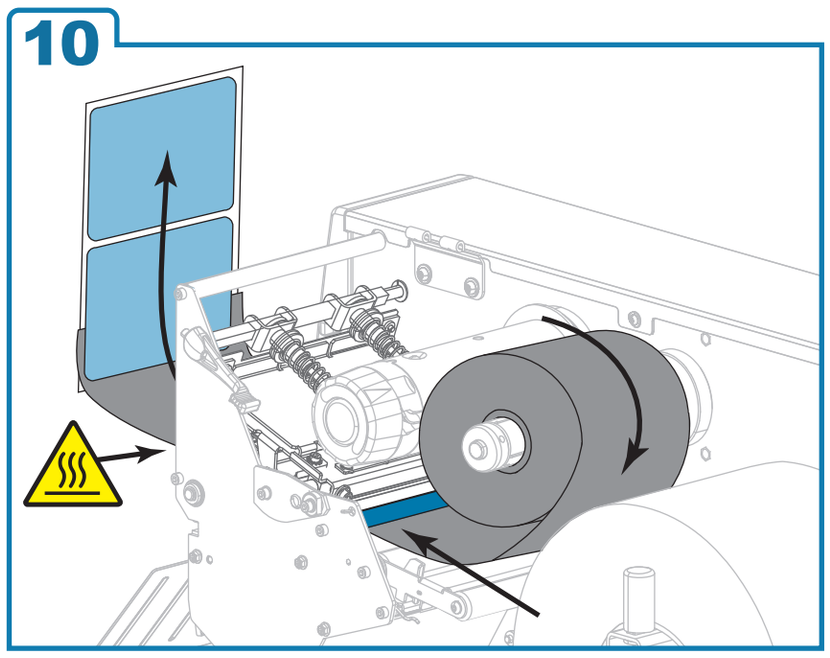

11

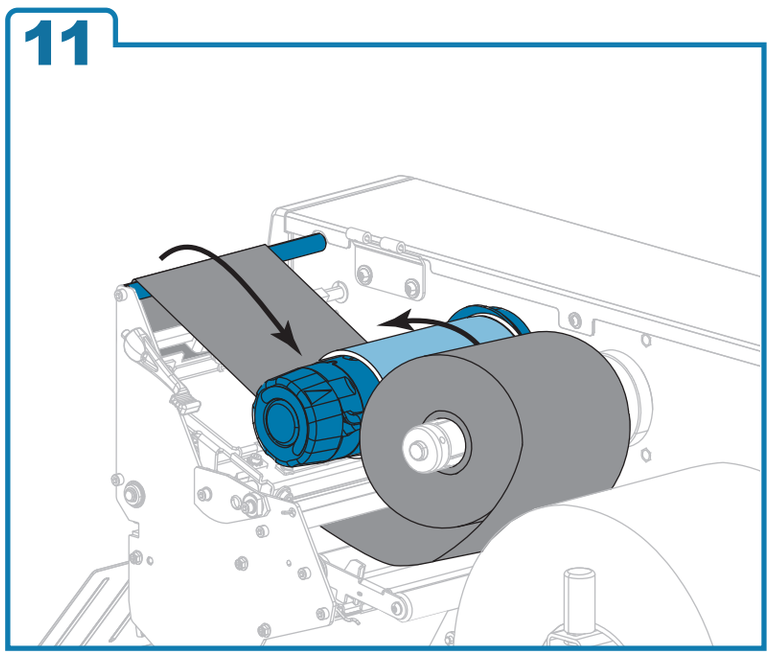

12

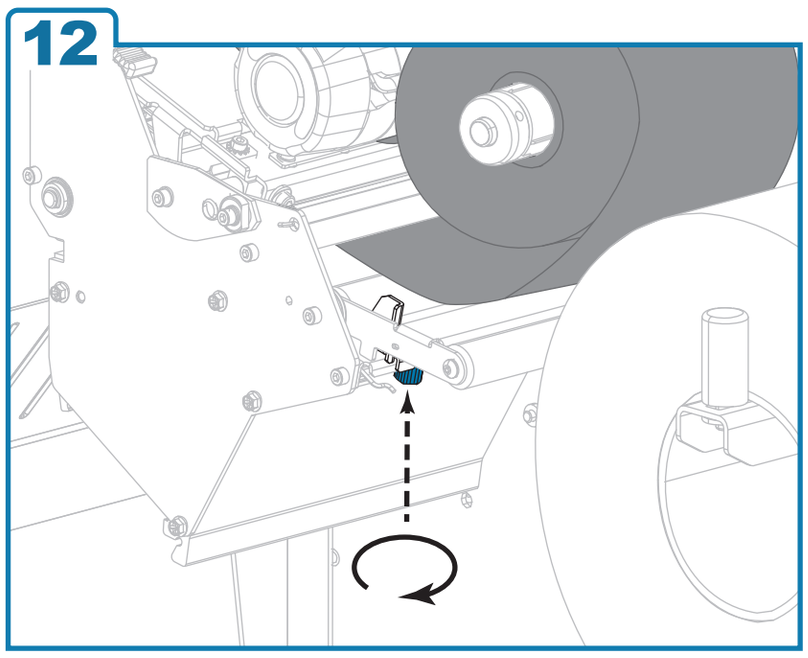

13

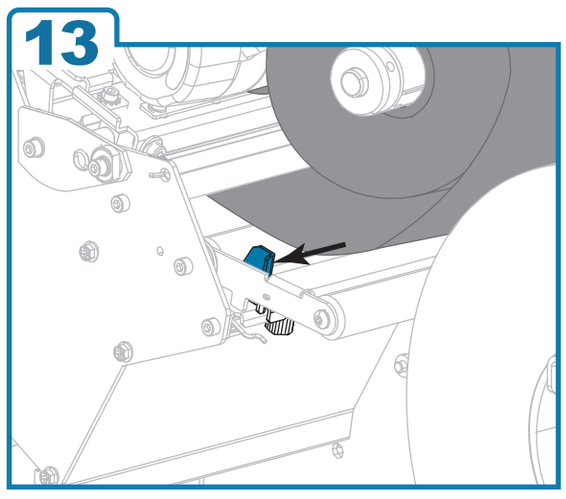

14

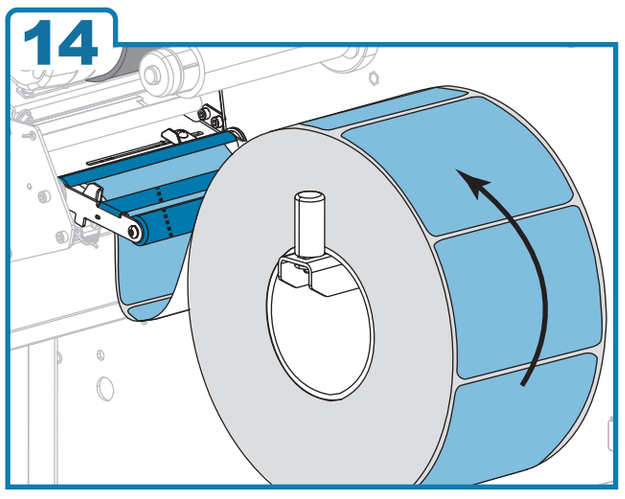

15

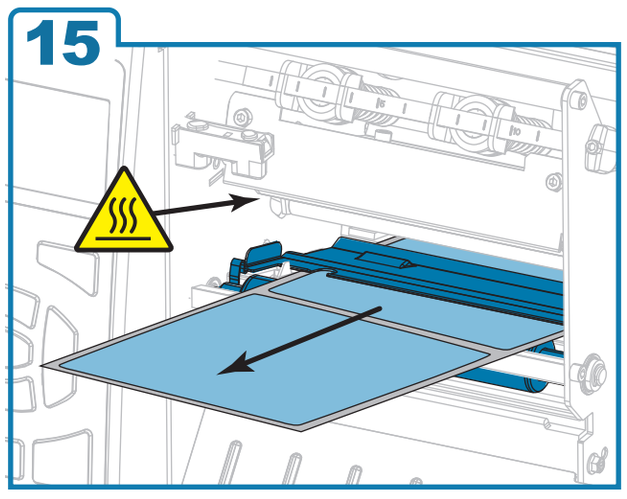

16

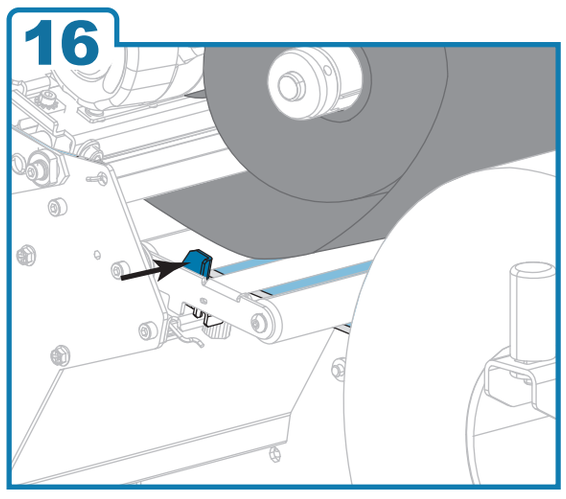

17

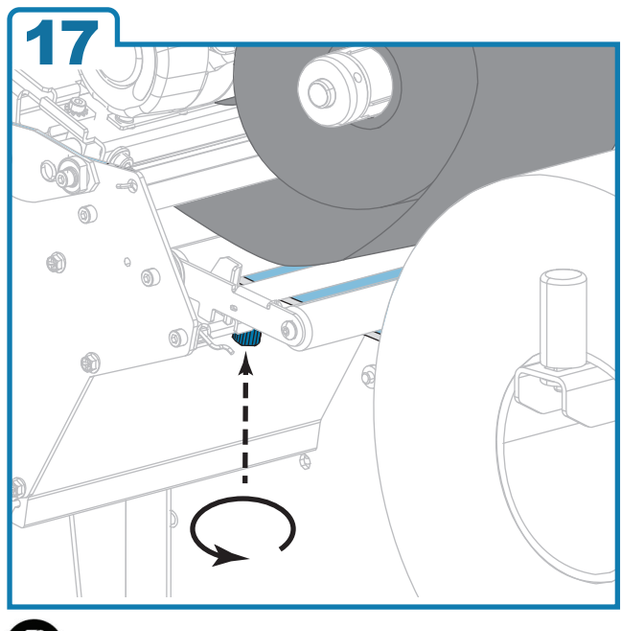

18

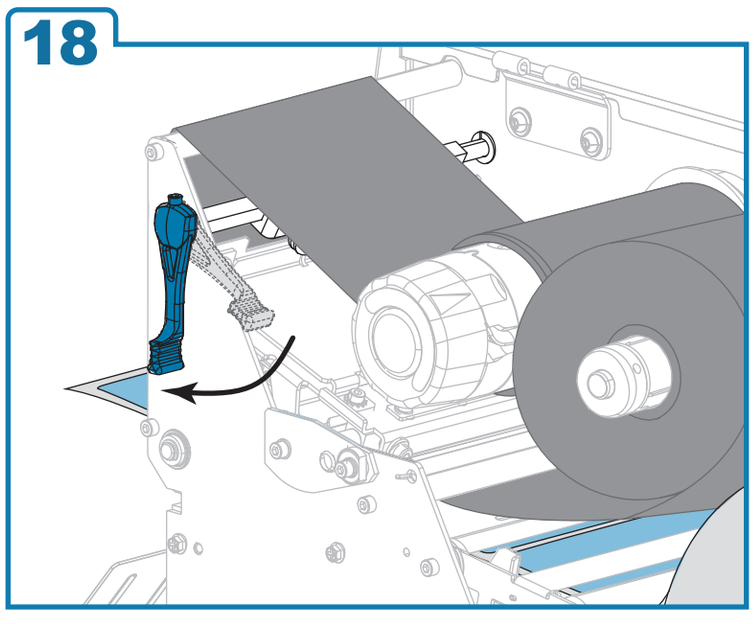

19

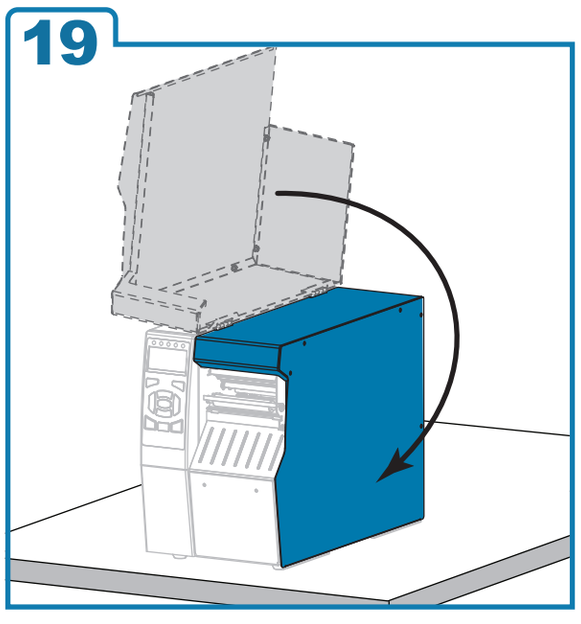

20

Printed in China on chlorine-free recycled paper.